CWDM Mux/Demux Module

1. Features

- Low Insertion Loss
- High Isolation
- Low PDL
- Compact Design
- Good channel-to-channel uniformity
- Wide Operating Wavelength:
  From 1260nm to 1620nm
- Wide Operating Temperature:
  From -40℃ to 85℃
- High Reliability and Stability

2. Applications

- CWDM System
- PON Networks
- CATV Links

3. Compliance

- Telcordia GR-1209-CORE-2001
- Telcordia GR-1221-CORE-1999
- RoHS

4. Specifications

1×N CWDM Mux/Demux Module

Parameters		1x2	1x4	1x8	1x16
Center Wavelength (nm)		ITU, ITU+1			
Passband (nm)		ITU±7.5			
Operating Wavelength (nm)		1460~1620 or 1260~1620			
Channel Space (nm)		20			
Fiber Type		SMF-28e or customer specified			
IL (dB) (P/A Grade)		0.7/1.0	1.4/1.7	2.0/2.5	3.5/4.0
Isolation (dB)	Adjacent Channel	30			
	Non-Adjacent Channel	50			
Ripple (dB)		0.3	0.4	0.5	0.5
PDL (dB)		0.2			
PMD (ps)		0.1			
RL (dB)		45			
Directivity (dB)		50			
Maximum Optical Power (mw)		500			
Operating Temperature (℃)		-40～85			
Storage Temperature (℃)		-40～85			
BOX Package (mm)		100*80*10			140*115*18
LGX Package		1U, 2U			
19” Rack mount Package		1U			

Notes:
1. Specified without connectors.
2. Add an additional 0.2dB loss per connector.

5. Mechanical Dimensions

CWDM Mux/Demux Module

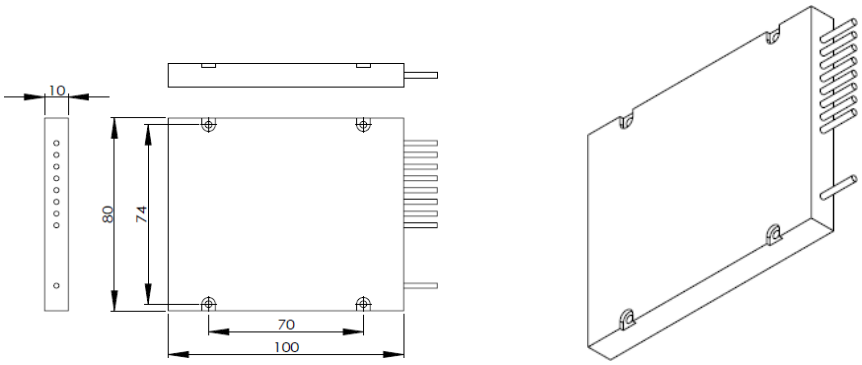

100X80X10

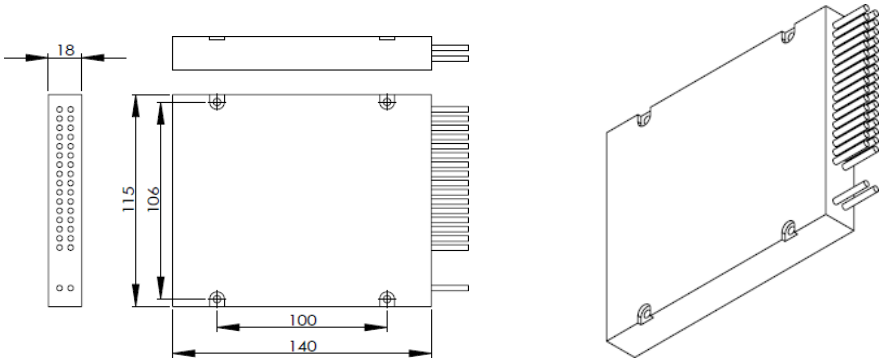

140X115X18